ZLED LIGHTING
ZLEDLIGHTING.COM

JOB / PROJECT NAME _____ DATE _____

PRODUCT MODEL # _____ QUANTITY _____

TEMPORARY LED WORK LIGHT – WITH 30 FOOT CORD



Extra-long 30 foot cord included

UL LISTED IP63





APPLICATIONS

- Warehouses
- Construction sites
- Loading docks



PRODUCT SPECIFICATIONS

WATTAGES	100W (standard), 150W (special order)
COLOR TEMPERATURE	50K
EFFICACY	120 lm/W
LUMENS	**100W-** 12,000; **150W-** 18,000
INPUT VOLTAGE	120/277V
CRI	>80
BEAM ANGLE	360°
CORD & PLUG LENGTH	30 ft.
LED LIFESPAN (L70)	50,000 hours
POWER FACTOR	>0.9
SURGE PROTECTION	6KV
WORKING TEMPERATURE	-40° to 40°C; -40° to 104°F
WEIGHT	100W - 7 lbs
DIMENSIONS	**100W-** 6.50″ x 11.42″ **150W-** 6.50″ x 12.80″
DAISY CHAIN	Maximum number of fixtures that can be wired in sequence 100W - 18/3 wire Max. 3 fixtures at 120VAC
RATED	IP63
LISTED	UL
WARRANTY	5 year

WARNING: OUTLET FOR FIXTURE LINKING ONLY. Do not connect power tools, extension cords, or other electrical devices.

Damage resulting from improper use, electrical overload, or unauthorized connections is not covered under the manufacturer's warranty.

PART NUMBERS	**ZL-GKS36-100W-50K-30FT**
	ZL-GKS36-150W-50K-30FT

ZLED LIGHTING
ZLEDLIGHTING.COM

JOB / PROJECT NAME _____ DATE _____

PRODUCT MODEL # _____ QUANTITY _____

TEMPORARY LED WORK LIGHT – WITH 30 FOOT CORD

LUMINOUS INTENSITY DISTRIBUTION

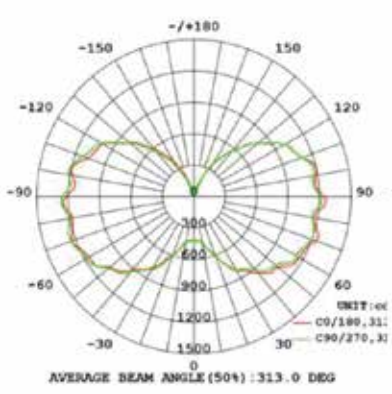

100W

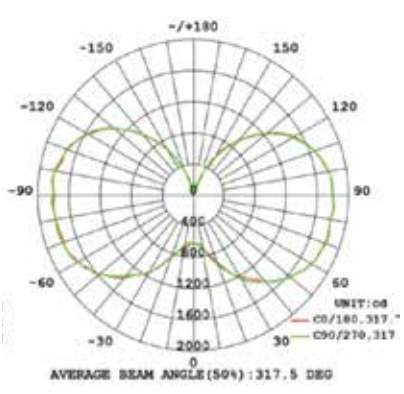

150W

DIMENSIONS

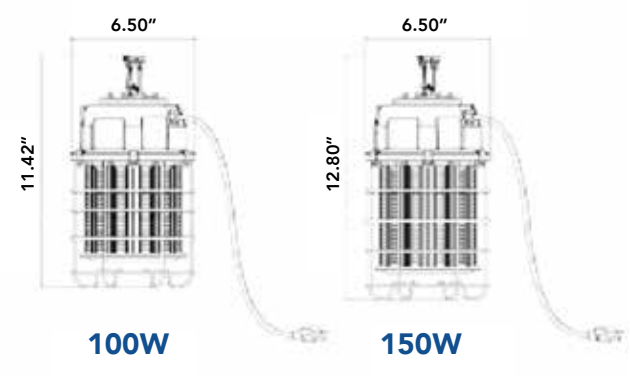

100W 150W