ZLED LIGHTING
ZLEDLIGHTING.COM

JOB / PROJECT NAME _____ DATE _____

PRODUCT MODEL # _____ QUANTITY _____

HIGH OUTPUT LED PAR LAMPS


PAR30


PAR30


PAR38


PAR30 / PAR38


PAR38



APPLICATIONS

- Foyer
- Vestibules
- Hospitality
- High ceilings
- Houses of worship
- Artwork lighting
- Mood lighting

IP20

PRODUCT SPECIFICATIONS

WATTAGES	**PAR30:** 35W **PAR38:** 35W, 55W
COLOR TEMPERATURES	27K, 30K, 35K, 40K, 45K, 50K, 55K, 60K, 65K
INPUT VOLTAGE	120V, 120-277V
LUMENS	**PAR30: 35W-** 2,800 - 3,100 **PAR38: 35W-** 3,300-3,500 **PAR38: 55W-** 4,600 - 5,400
LED CHIP	Osram
CRI	85
HOUSING	White, Optional Black
BASE TYPE	E26
BEAM SPREAD	15, 25, 45, 60, 80
LED LIFESPAN (L70)	50,000 hours
OPERATING TEMPERATURE	-25° to 45°C; -13° to 113°F
DIMENSIONS (WxH)	**PAR30:** 3.74" x 4.72" **PAR38:** 4.72" x 5.23", 4.72" x 5.39"
RATED	IP20
LISTED	ETL
WARRANTY	5 year

Micro Fan for active cooling

PRODUCT BUILDER

ex: PAR-30V-HO-E26-35W-40K-120V-15-DIM-WH

PRODUCT #		BASE TYPE		WATTAGE	COLOR TEMP	VOLTAGE INPUT	BEAM SPREAD	DIMMING	HOUSING
	-	E26	-		-	-	-	-	-
PAR30V-HO PAR38V-HO			PAR30	35=35W	27K 30K 35K 40K 45K 50K 55K 60K 65K	120V 120-277V	15 25 45 60 80	**DIM** - Only 120V is dimmable	**WH**=White **BK**=Black (Optional)
			PAR38	35=35W 55=55W					

ZLED LIGHTING
ZLEDLIGHTING.COM

JOB / PROJECT NAME _____ DATE _____

PRODUCT MODEL # _____ QUANTITY _____

HIGH OUTPUT LED PAR LAMPS

35W LED PAR30

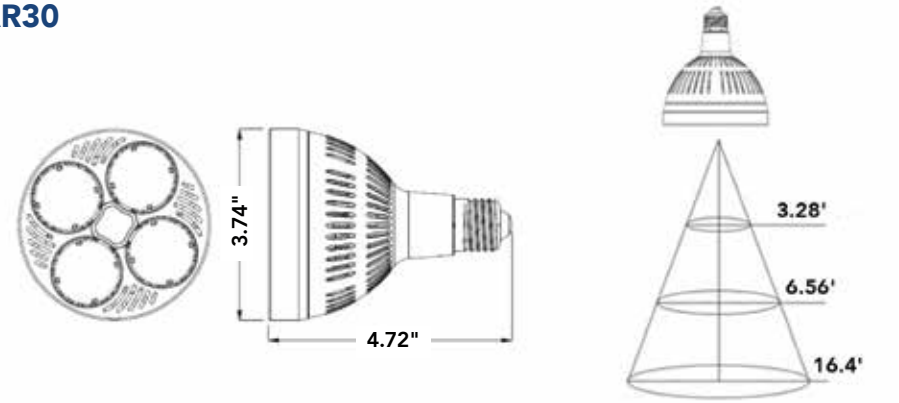

Height / Angle	15°		25°		45°		80°	
	Foot Candles	Spot Size	Foot Candles	Spot Size	Foot Candles	Spot Size	Foot Candles	Spot Size
3.28' (1 Meter)	3732	0.66′	3064	0.72′	1330	1.25′	393	2.07′
6.56' (2 Meter)	933	1.35′	765	1.48′	322	2.49′	98	4.13′
9.84' (3 Meter)	414	2.00′	340	2.20′	147	3.71′	43	6.20′
13.12' (4 Meter)	233	2.69′	57	2.85′	49	5.22′	19	8.96′
16.4' (5 Meter)	149	3.35′	122	3.67′	53	6.20′	15	10.33′

55W LED PAR38

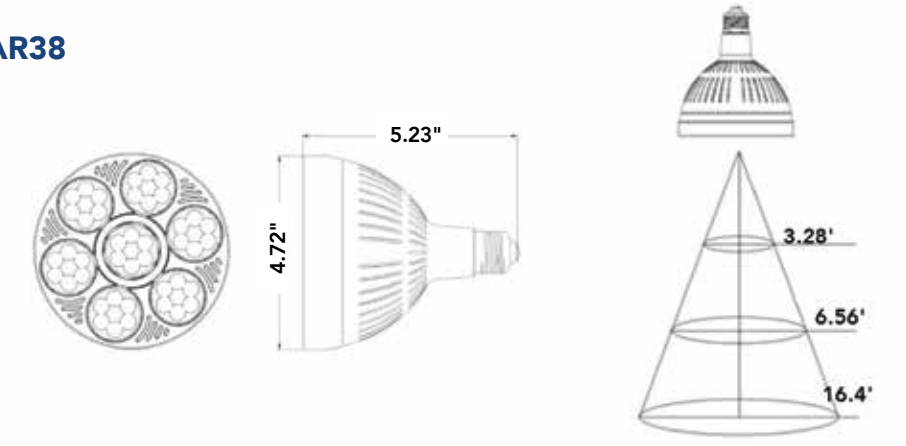

Height / Angle	15°		25°		45°		80°	
	Foot Candles	Spot Size	Foot Candles	Spot Size	Foot Candles	Spot Size	Foot Candles	Spot Size
3.28' (1 Meter)	3623	0.84′	2263	1.05′	1837	1.12′	400	3.44′
6.56' (2 Meter)	905	1.68′	574	2.10′	459	3.6′	114	6.33′
9.84' (3 Meter)	402	5.53′	251	3.31′	204	5.5′	44	9.45′
13.12' (4 Meter)	144	3.37′	143	4.1′	89	7.2′	28	12.7′
16.4' (5 Meter)	100	4.21′	96	5.12′	59	9.1′	19	15.92′