ZLED LIGHTING
ZLEDLIGHTING.COM

JOB / PROJECT NAME _____ DATE _____

PRODUCT MODEL # _____ QUANTITY _____

8" LED ARCHITECTURAL DOWNLIGHT FRAME IN KIT

PRODUCT SPECIFICATIONS

WATTAGES	10W, 14W, 22W, 32W, 44W
COLOR TEMPS	27K, 30K, 35K, 40K
EFFICACY	100 lm/W
LUMENS	**10W-** 1,000; **14W-** 1,400; **22W-** 2,200; **32W-** 3,200; **44W-** 4,400
INPUT VOLTAGE	120/277V
CRI	90
DIMMABLE	120/277VAC, Tri-Mode (0~10V/Triac/ELV)
EMERGENCY BATTERY	Sold separately
WARRANTY	5 year

Suitable for damp locations

APPLICATIONS

- Office spaces
- Retail stores
- Restaurants

Accentuating architecture or design elements such as artwork, alcoves, or ceilings.

PRODUCT BUILDER

ex: ZL-LED-AD-FINK-8IN-10W-27K-TL

ZL-LED	-	TYPE: AD	-	STYLE: FINK	-	SIZE: 8IN	-	WATTAGE:	-	COLOR TEMP:	-	TL
		AD=Architectural Downlight		FINK=Frame in Kit				10W 14W 22W 32W 44W		27K 30K 35K 40K		

DIMENSIONS

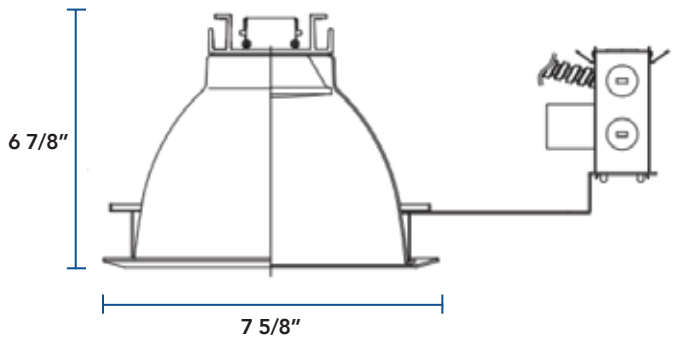

Ceiling Cut-out- 8 1/8"

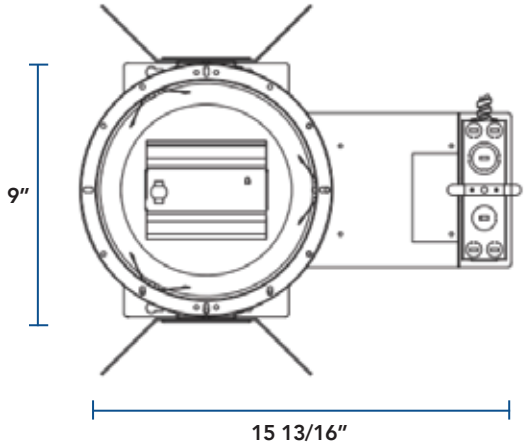

Specifications and actual product may vary.

ZLED LIGHTING
ZLEDLIGHTING.COM

JOB / PROJECT NAME _____ DATE _____

PRODUCT MODEL # _____ QUANTITY _____

8" LED ARCHITECTURAL DOWNLIGHT FRAME IN KIT

ARCHITECTURAL DOWNLIGHT TRIMS

Specular Open Reflector

Baffle w/ Reflector

Baffle w/ Regressed Lens

Reflector w/ Regressed Lens

Wall Wash w/ Reflector Plate

Reflector w/ Frosted Floating Lens

Reflector w/ Frosted 3.5" Center Hole Lens

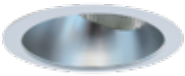
Optional Sloped Ceiling Adaptor

DISCLAIMER:
Please note that not all Downlight housing compatibility trims in this catalog are compatible with every product line. Compatibility may vary based on specific product specifications, installation requirements, and system configurations. We recommend verifying product compatibility with your specific lighting needs before purchasing. If you have any questions or need assistance, please contact our sales team for further guidance.

PRODUCT BUILDER

ex: ZL-LED-AD-FINK-4IN-10W-27K-TL

ZLED-TRIM	-	SIZE	-	STYLE	-	REFLECTOR FINISH	-	TRIM RING FINISH

SIZE
- **4**=4 inches
- **6**=6 inches
- **8**=8 inches

STYLE
- **SOR**=Specular Open Reflector
- **BRW**=Baffle w/ Reflector - White
- **BRK**=Baffle w/ Reflector - Black
- **BRLW**=Baffle w/ Regressed Lens - White
- **BRLK**=Baffle w/ Regressed Lens - Black
- **RRL**=Reflector w/ Regressed Lens
- **WWRP**=Wall Wash w/ Relfector Plate
- **RFFL**=Relector w/ Frosted Floating Lens
- **RFCHL**=Reflector with Frosted 3.5" center Hole Lens
- **SCA**=Optional Sloped Ceiling Adaptor*

REFLECTOR FINISH
- **WP**=White Painted
- **HZ**=Haze Clear

TRIM RING FINISH
- **WH**=White Plastic Trim Ring - Standard
- **WHR**=White Metal Ring
- **SN**=Satin Nickel
- **CH**=Chrome
- **PSF**=Polished Self Flange (for Open or Wall Wash Reflectors*)

Specifications and actual product may vary.